DMS Wireless
a division of DMS International

OM450UV Radiation Patterns **February 2009**

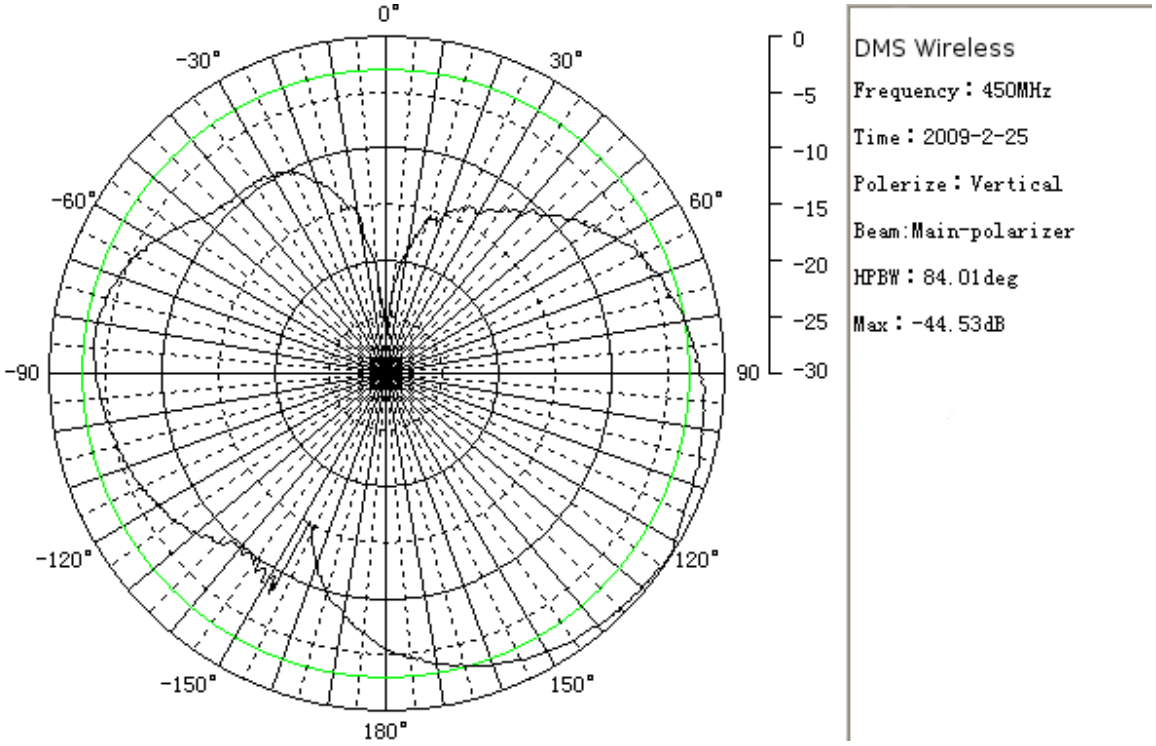

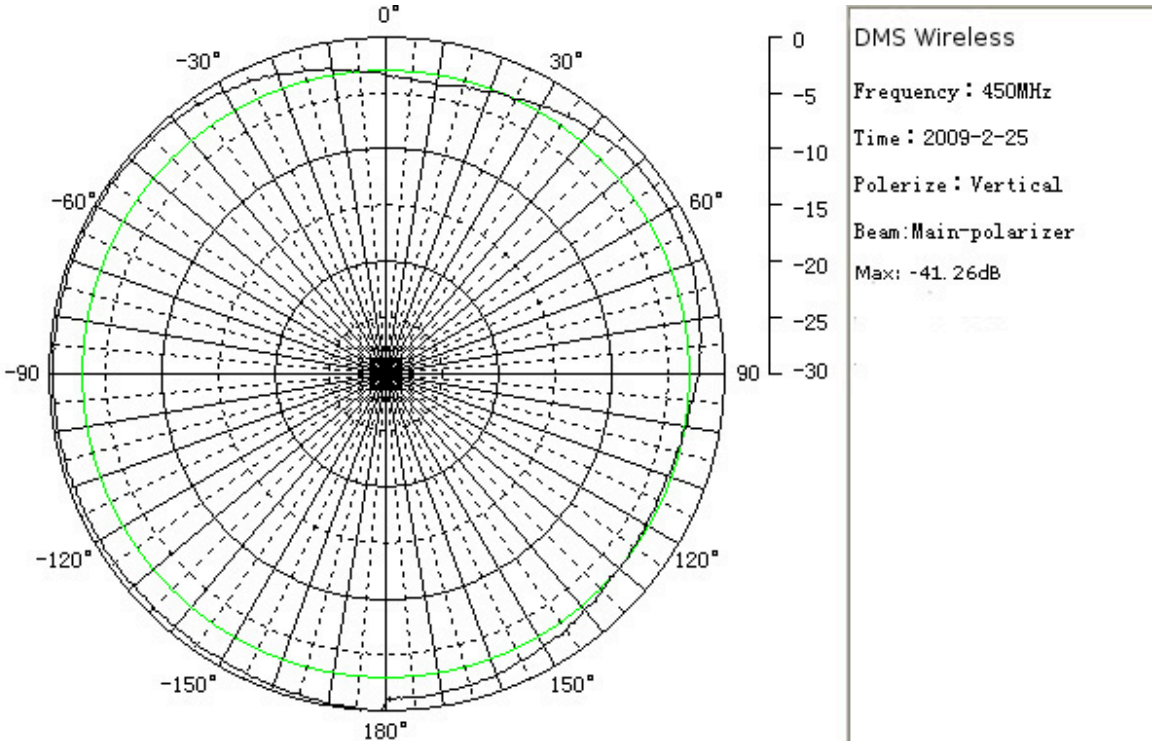

DMS Wireless
a division of DMS International
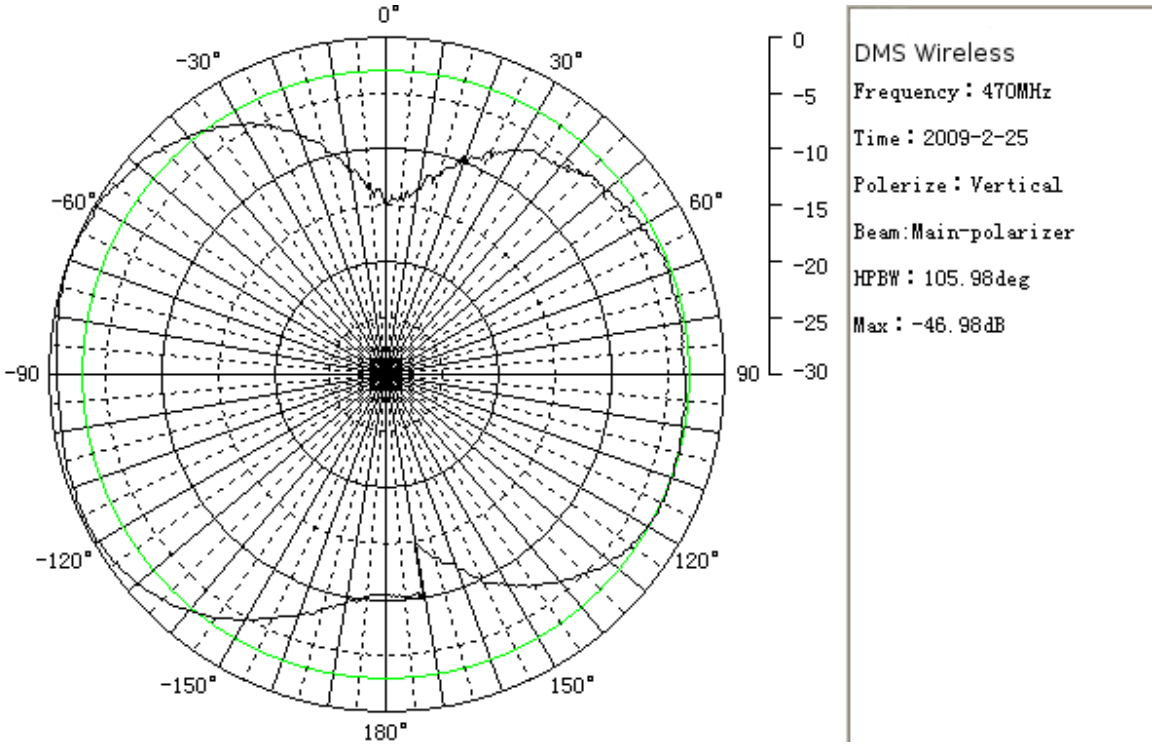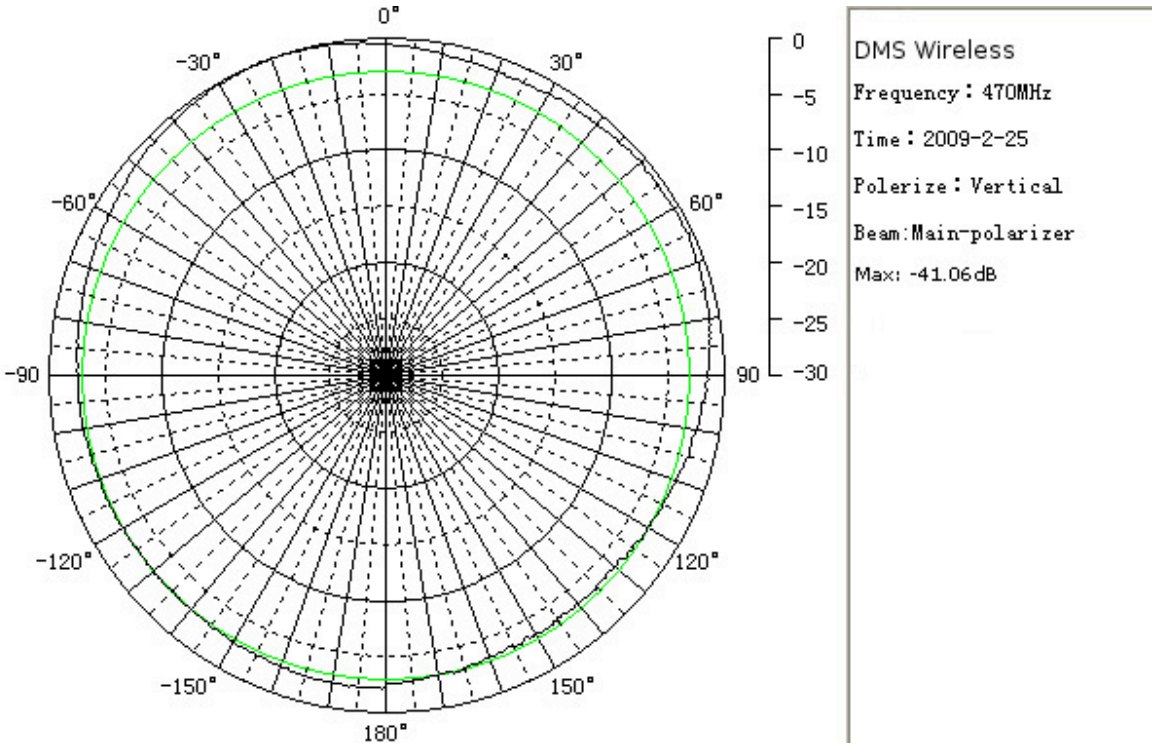
OM450UV Radiation Patterns **February 2009 continued**